BLACK+
DECKER

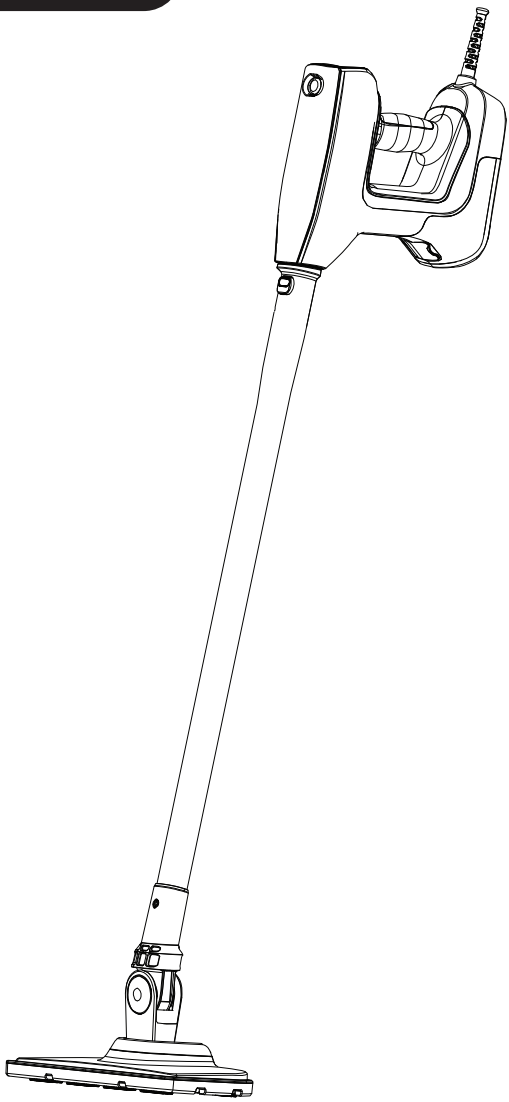

www.blackanddecker.com.au
www.blackanddecker.co.nz

BHSM15FX

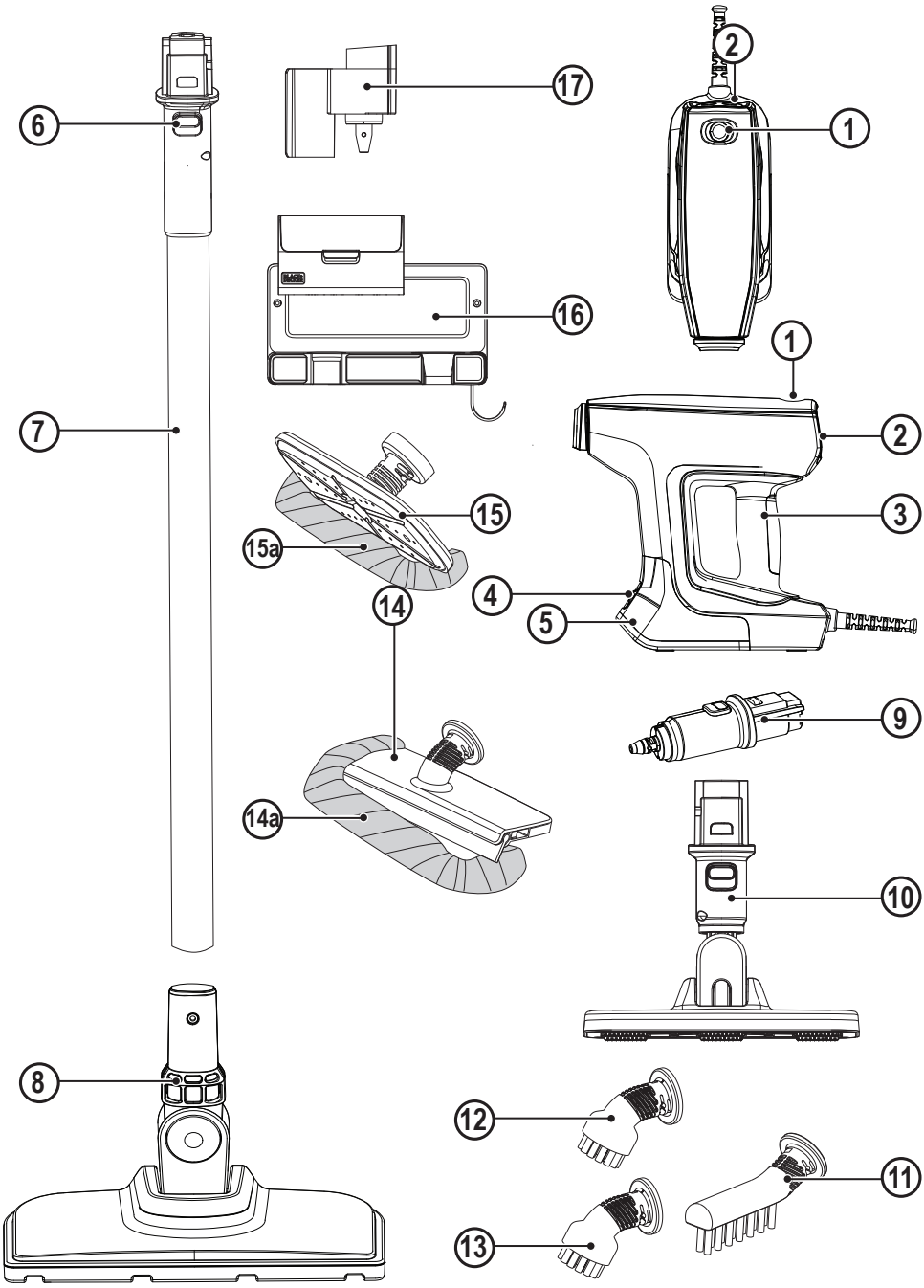
6
17
2
1
16
1
7
2
3
15
15a
4
5
14
9
14a
10
8
12
11
13

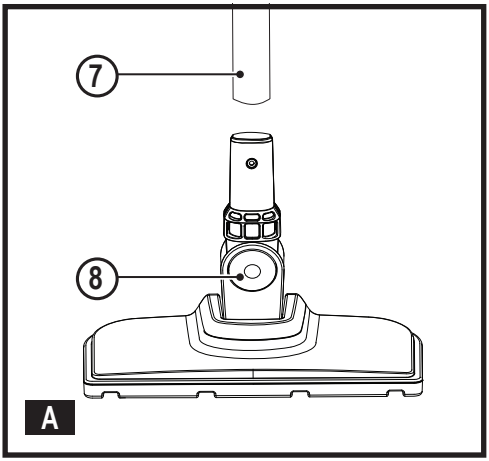
7
8
A

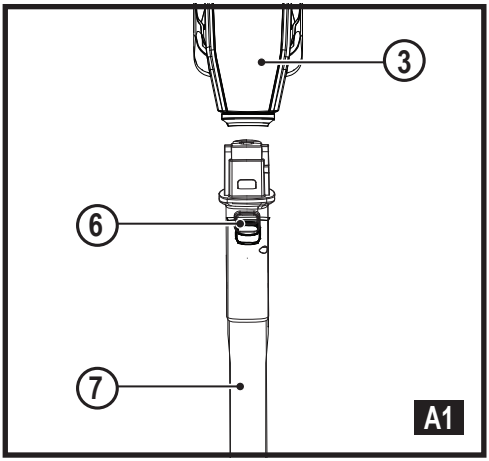
3
6
7
A1

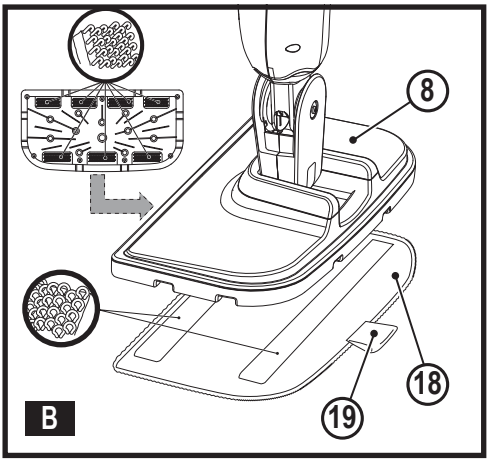
8
18
19
B

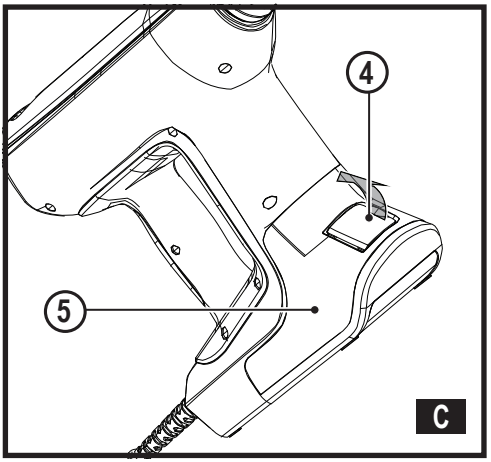
4
5
C

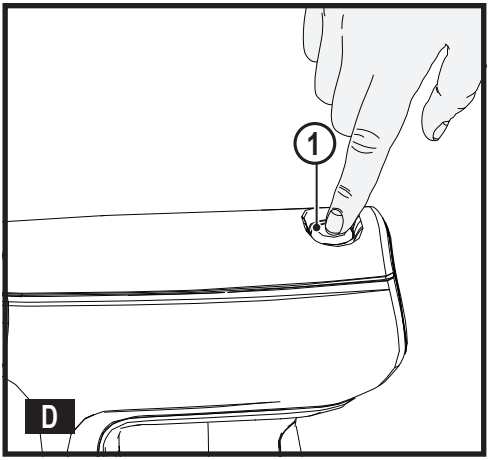
1
D

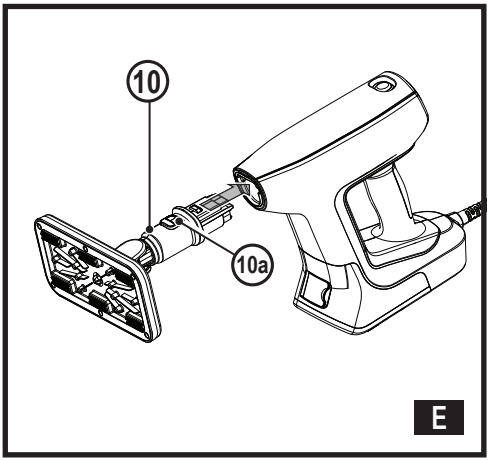
10
10a
E

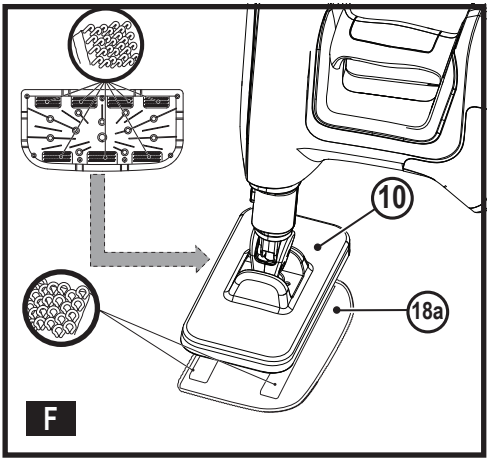
10
18a
F

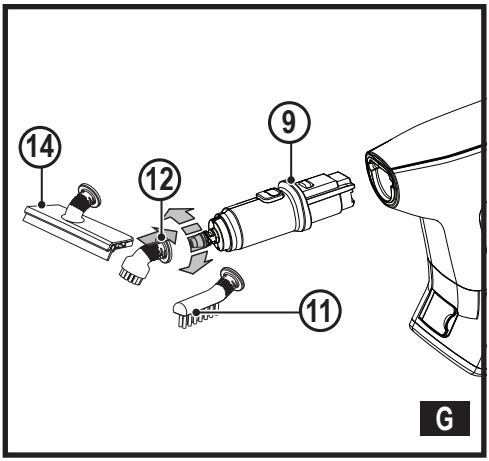
14
12
9
11
G

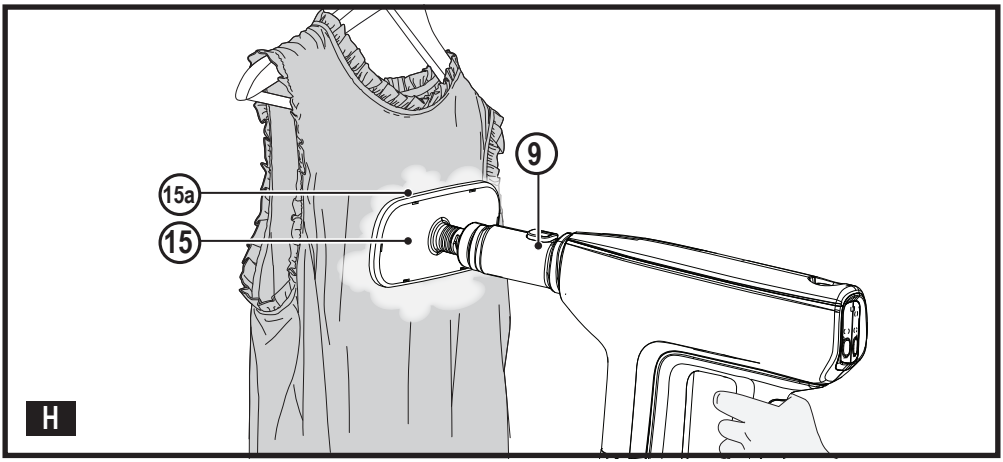
15a
15
9
H

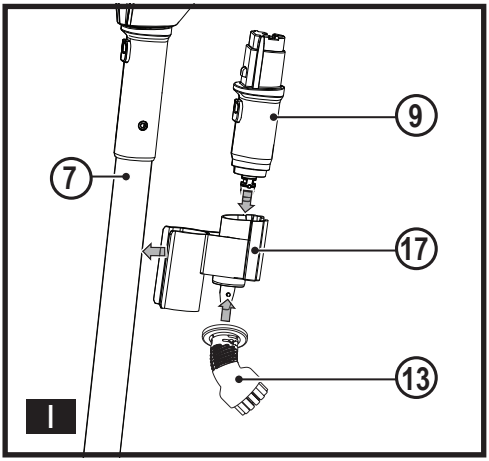
9
7
17
13
I

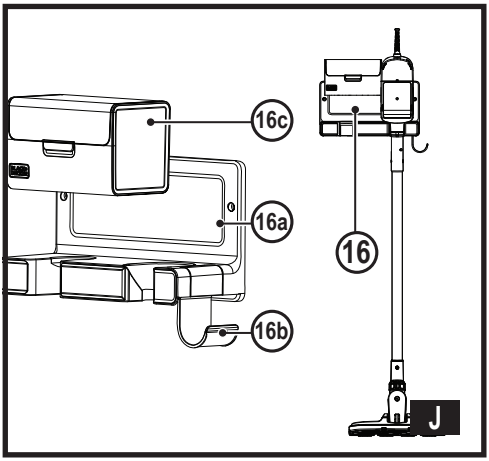
16c
16a
16b
16
J

Intended use
Your BLACK+DECKER BHSM15FX steam mop has been designed for sanitising and cleaning sealed hardwood, sealed laminate, linoleum, vinyl, ceramic tile, stone and marble floors. This appliance is intended for indoor household use only.

Safety Instructions



Warning! Read all safety warnings and all instructions. Failure to follow the warnings and instructions listed below may result in electric shock, fire and/or serious injury.



Warning! When using mains-powered appliances, basic safety precautions, including the following, should always be followed to reduce the risk of fire, electric shock, personal injury and material damage.

- The appliance can be used by persons with reduced physical, sensory or mental capabilities or lack of experience and knowledge if they have been given supervision or instruction concerning use of the appliance in a safe way and understand the hazards involved. Children shall not play with the appliance.
- The liquid or steam must not be directed towards equipment containing electrical components, such as the interior of ovens
- Unplugged after use and before carrying out user maintenance on the appliance.
- The appliance shall not be left unattended while it is connected to the supply mains;
- The appliance is not to be used if it has been dropped, if there are visible signs of damage or if it is leaking.
- Keep the appliance out of reach of children when it is energized or cooling down.
- The intended use is described in this manual.
- The use of any accessory or attachment or the performance of any operation with this appliance other than those recommended in this instruction manual may present a risk of personal injury.
- Retain this manual for future reference.

Using your appliance

- Do not direct steam at people, animals, electrical appliances or electrical outlets.
- Do not expose to rain.
- Do not immerse the appliance in water.
- Do not leave the appliance unattended.
- Do not leave the appliance connected to an electrical outlet when not in use.
- Never pull the power lead to disconnect the appliance from the socket. Keep the appliance lead away from heat, oil and sharp edges.
- Do not handle steam cleaner with wet hands.
- Do not pull or carry by cord, use cord as a handle, close door on cord, pull cord around sharp corners or expose cord to heated surfaces.

- Do not use appliance in an enclosed space filled with vapour given off by oil-base paint thinner, some mothproofing substances, flammable dust, or other explosive or toxic vapours.
- Check the type of floor with the manufacturer.
- Do not use on leather, wax polished furniture or floors, synthetic fabrics, velvet or other delicate, steam sensitive materials.



Warning! Do not use on unsealed wood or unsealed laminate floors. On surfaces that have been treated with wax or some no wax floors, the sheen may be removed by the heat and steam action. It is always recommended to test an isolated area of the surface to be cleaned before proceeding.

We also recommend that you check the use and care instructions from the floor manufacturer.

- Never put descaling, aromatic, alcoholic or detergent products into the steam cleaner, as this may damage it or make it unsafe for use.
- If the home circuit breaker activates while using the steam function, discontinue product use immediately and contact the customer support centre. (Beware of the risk of electrical shock.)
- The appliance emits very hot steam to sanitize the area of use. This means that the steam head, cleaning pads and carpet attachment get very hot during use.

Caution! Always wear suitable shoes when using your steam mop and when changing the accessories on your steam mop. Do not wear slippers or open toed footwear.

- The lid may become hot during use.
- Steam may escape from the appliance during use. Care should be taken when using this appliance. DO NOT touch any parts which may become hot during use.
- Switch the appliance off and remove from socket before filling the water tank.
- If steam is observed escaping from the body of the hand held steam cleaner, switch off and disconnect the unit from the mains supply, allow to cool. Contact your nearest authorised repair agent.
  DO NOT CONTINUE TO USE THE APPLIANCE.

After use

- Unplug the appliance and allow to cool before cleaning.
- When not in use, the appliance should be stored in a dry place.
- Children should not have access to stored appliances.

Inspection and repairs

- Unplug the appliance and allow to cool before performing any maintenance or repairs.
- Before use, check the appliance for damaged or defective parts.
  Check for breakage of parts, damage to switches and any other conditions that may affect its operation.
- Regularly check the power lead for damage.
- Do not use the appliance if any part is damaged or defective.
- Have any damaged or defective parts repaired or replaced by an authorized repair agent.
- Never attempt to remove or replace any parts other than those specified in this manual.

Safety of others

- This appliance can be used by persons with reduced physical, sensory or mental capabilities or lack of experience and knowledge if they have been given supervision or instruction concerning use of the appliance in a safe way and understand the hazards involved. Children shall not play with the appliance.
- Children should be supervised to ensure that they do not play with the appliance.
- The plug must be removed from the socket-outlet before cleaning or maintaining the appliance.
- The liquid or steam must not be directed towards equipment containing electrical components, such as the interior of ovens.
- The appliance shall not be left unattended while it is connected to the supply mains.
- The appliance is not to be used if it has been dropped, if there are visible signs of damage or it is leaking.
- Keep the appliance out of reach of children when it is energized or cooling down.
- Care should be taken when using the appliance due to the emission of steam.
- Unplug the appliance during filling and cleaning.
- The appliance must not be left unattended while it is connected to the supply mains.
- keep the appliance and its cord out of reach of children less than 8 years of age when it is energized or cooling down.

Residual risks

Additional residual risks may arise when using the tool which may not be included in the enclosed safety warnings. These risks can arise from misuse, prolonged use etc.
Even with the application of the relevant safety regulations and the implementation of safety devices, certain residual risks can not be avoided. These include:

- Injuries caused by touching any moving parts.
- Injuries caused by touching any hot parts.
- Injuries caused when changing any parts or accessories.
- Injuries caused by prolonged use of the appliance. When using any appliance for prolonged periods ensure you take regular breaks.

Electrical safety

Warning! Warning! This product must be earthed. Always check that the power supply corresponds to the voltage on the rating plate.

Power plugs must match the outlet. Never modify the plug in any way. Unmodified plugs and matching outlets will reduce risk of electric shock.

- If the supply cord is damaged, it must be replaced by the manufacturer or an authorised BLACK+DECKER Service Centre in order to avoid a hazard.

Extension cables & Class 1 product

- A 3-core cable must be used as your appliance is earthed and of Class 1 construction.
- Always use an approved extension cable suitable for the power input of this appliance (see technical data). Up to 30m of 1.50mm^2 extension cable can be used without loss of product performance. Before use, inspect the extension cable for signs of damage, wear and ageing. Replace the extension cable if damaged or defective. When using a cable reel, always unwind the cable completely.

Labels on appliance

The following pictograms along with the date code are shown on the appliance.



CAUTION! Hot Steam



Wash at 60°C. Do not use bleach or fabric softener

Features

This appliance includes some or all of the following features.

1. On/off switch
2. Steam user interface
3. Hand held steam unit
4. Filler cap
5. Water tank
6. Floor extension release button
7. Floor extension
8. Floor cleaning head
9. Adaptor
10. Small worktop mop head

10a. Small worktop mop head release button

11. Grout brush
12. Small brush
13. Small brush with copper bristles
14. Squeegee accessory (for use on shower screens / glass / mirrors / clothing / upholstery)

14a. Squeegee sock

15. Garment steamer attachment (Available with BHSM15FX10)

15a. Garment steamer sock (Available with BHSM15FX10)

16. Wall storage (Available with BHSM15FX10)
17. On pole storage (Available with BHSM15FX10)
18. Floor cleaning pad

18a. Small worktop cleaning pad

19. Floor cleaning pad removal tab

Assembly

Warning! Before attempting any of the following instructions, make sure that the appliance is switched off and unplugged and the appliance is cold and does not contain any water.

Attaching the floor extension to the floor cleaning head (Fig. A)

- Push the floor extension (7) into the floor cleaning head (8) making sure it clicks securely into place, as shown in figure A.

Attaching the hand held steam unit to the floor extension (Fig. A1)

- Push the hand held steam unit (3) firmly onto the floor extension (7) making sure it sits correctly over the interface and clicks securely into place.

Warning! Inspect the seal between the connection point on the hand held steam unit (3) and the floor extrension (7) before each use. If the seal malfunctions or is damaged, please contact your nearest authorised repair agent. Do not use the appliance.

Removing the hand held steam unit

- Push the release button (6) on the floor extension (7) and lift the hand held steam unit (3) off the interface.

Attaching a cleaning pad (Fig. B)

Replacement cleaning pads are available from your BLACK+DECKER dealer :- (cat no. FSMP20-XJ).

- Place a cleaning pad (18) on the floor with the velcro 'loop' side facing up.
- Lightly press the steam mop down onto the cleaning pad.

Caution! Never leave the steam mop in one spot on any surface for any period of time. Always place the steam mop supported in the upright position when stationary and make sure the steam mop is turned off when not in use.

Removing a cleaning pad

Caution! Always wear suitable shoes when changing the cleaning pad on your steam mop.

Do not wear slippers or open toed footwear.

- Return the steam mop to the upright position and turn the steam mop 'OFF'.
- Wait until the steam mop cools down (approximately 5 minutes).
- Lift the steam mop away from the cleaning pad (18) freeing it from the velcro fastening by putting weight on the cleaning pad removal tab (19).

Caution! Never leave the steam mop in one spot on any surface for any period of time.

Always place the steam mop supported in the upright position when stationary and make sure the steam mop is turned off when not in use.

Filling the water tank (Fig. C)

Note! Fill the water tank (5) with clean tap water (Do not use any additives or chemicals).

Note! In areas of hard water, the use of de-ionised water is recommended.

- Open the filler cap (4) by flipping it up.
- Fill the water tank (5) with water (Do not use any additives or chemicals).

Warning! When filling, maintain the water tank (5) in vertical position with the cap at the top.

Warning! Your water tank has a 0.5 litre capacity. Do not over fill the tank.

- Close the filler cap (4).

Note! Ensure the filler cap is firmly secured.

Use

Important! This unit will kill 99.9% of bacteria and germs when used in accordance with the instructions in this manual and with the micro fibre pads fitted and a continuous run time of 90 seconds.

Switching on and off (Fig. D)

- To switch the appliance on, press the ON/Off switch (1). It takes approximately 30 seconds for the boiler to heat up. Once boiler is up to temperature the user must press a steam setting to create steam.
- To switch the appliance off, press the ON/Off switch (1).

Caution! Never leave the steam mop in one spot on any surface for any period of time.

Always place the steam mop supported in the upright position when stationary and make sure the steam mop is turned off when not in use.

Caution! Always empty the steam mop after use.

Note! When first filled or after running dry, it can take up to 45 seconds for steam to be produced.

Floor Worktop Surface	Setting
Wood/Laminate	Low steam setting
Tile/Vinyl	High steam setting
Stone/Marble	High steam setting
Accessories	**Setting**
Grout Brush	High Steam setting
Small Brush	High Steam setting
Small Brush with copper bristles	High Steam setting
Window Squeegee	Low steam setting
Garment Steamer	Low steam setting

Steam user interface

This steam mop is fitted with an Steam user interface panel (2) which shows two steam settings. They are used to select the correct operating mode for your particular cleaning operation.

- Turn unit on by pressing the On/Off switch (1).
- Green LED starts flashing as boiler heats up.
- Green LED stays solid once boiler is up to temp.
- User must press either low or high steam button to create steam.

- White LED is lit up to show which steam setting is being used.
- User can press the steam button to pause the steam flow and the white LED goes off.
- To switch appliance off, press the on/off switch (1).

	Off
	On (boiler heat up) 30 seconds flashing
	On (boiler ready)
	On (High Flow)
	On (Low Flow)

The steam mop will select the correct volume of steam required for your particular cleaning operation.
Note: Always check you are using the correct setting before using your steam mop.

Attaching the small worktop mop head (Fig. E)

- Push small worktop mop head (10) into the hand held steam unit (3) making sure it clicks securely into place, as shown in figure E.

Attaching a cleaning pad to the small worktop mop head (Fig. F)

Replacement cleaning pads are available from your BLACK+DECKER dealer :- (cat no. FSMP60-XJ).

- Place a small desktop cleaning pad (18a) on the floor with the velcro 'loop'side facing up.
- Lightly press the small worktop mop head (10) down onto the cleaning pad.

Caution! Never leave the steam mop in one spot on any surface for any period of time.

Always place the small worktop mop head supported in the upright position when stationary and make sure the hand heldsteam mop is turned off when not in use.

Attaching the adaptor and accessories to the hand held steam cleaner

Warning! Inspect the seal between the connection point on the hand held steam cleaner and the adaptor (9) before each use. If the seal malfunctions or is damaged, please contact your nearest authorised repair agent. Do not use the appliance.

Attaching the adaptor (Fig. G)

- Press the adaptor release button on the adaptor (9).
- Connect the adaptor (9) to the hand held steam cleaner and release adaptor release button making sure it clicks into place.

Important! Ensure that the adaptor (9) is securely connected to the hand held steam cleaner. If steam escapes from the joint, the adaptor is incorrectly fitted. Switch off, allow the unit to cool then remove and refit.
Warning! The unit should be switched off before the adaptor is fitted.

Attaching accessories 11 - 15 (Fig G, H)

- Align the lugs on the adaptor (9) with the recesses on the accessory.
- Press the accessory onto the steam nozzle and twist anticlockwise until the accessory clicks into place.

Important! All accessories must be attached to the adaptor (9) for use.

Removing an accessory

- Twist the accessory clockwise then pull away from the adaptor (9).

Warning! Allow the unit and all accessories to cool before attempting to remove.

Removing the adaptor

- Press the adaptor release button on the adaptor (9) and pull away from the hand held steam unit (3).

Warning! Allow the unit and all accessories to cool before attempting to remove.

Removing the small worktop floorhead (Fig. E)

- Push the small worktop floorhead release button (10a) and pull away from the hand held steam unit (3).

Warning! Allow the unit and all accessories to cool before attempting to remove.

Hints for optimum use

General

Caution: Never use the steam mop without first attaching a cleaning pad.

- Always vacuum or sweep the floor before using the steam mop.
- The easiest way to use the appliance is to tilt the unit to a 45º angle and clean slowly, covering a small area at a time.
- Use water only with no additives or chemicals with your steam mop. To remove stubborn stains from vinyl or linoleum floors, you can pre-treat with a mild detergent and some water before using the steam mop.

Steam Cleaning with the mop

- Fit hand steam cleaner to the floor extension (7).
- Place a cleaning pad (18) on the floor with the velcro 'loop' side facing up.
- Lightly press the steam mop down onto the cleaning pad (18).
- Connect the steam mop to the mains.
- Press the ON/OFF button (1). It takes approximately 30 seconds for the boiler to heat up..

Note! When first filled or after running dry, it can take up to 45 seconds for steam to be produced.

- Once boiler is up to temperature, Press the required steam setting button to start steam flow
- It takes a few seconds for steam to enter the cleaning pad. The steam mop will now glide easily over the surface to be sanitized/cleaned.
- Push and pull the steam mop slowly across the surface to thoroughly steam clean each section.
- When you have finished using the steam mop, press the steam flow button to stop steam flow, return to an upright position, making sure that it is supported and turn "OFF". Wait until the steam mop cools down (Approx 5 mins).

Caution! It is important to monitor the water level in the water tank. To refill the water tank and continue to sanitize/clean stand the mop upright making sure that it is supported and turn the steam mop 'OFF'.

Unplug the unit from the electrical wall outlet, and refill the water tank.

Caution! Never leave the steam mop in one spot on any surface for any period of time. Always place the steam mop supported in the upright position when stationary and make sure the steam mop is turned off when not in use.

After use

- Wait until the steam mop cools down.
- Unplug the steam mop from the electrical wall outlet.
- Empty the water tank.
- Remove the cleaning pad (18) and wash it ready for next use (take care to follow the wash care instructions printed on the cleaning pad).

Steam Cleaning with the small worktop mop head

- Fit hand held steamer to the counter top mop (10)
- Place cleaning pad (18a) onto the counter top with velcro loop side facing up
- Lightly press the counter top floorhead onto the cleaning pad (18a)
- Connect hand held steam mop to the mains
- Press the on/Off button (1). It takes approx 30 seconds for the boiler to heat up
- Once boiler is up to temperature, Press the required steam setting button to start steam flow
- It takes a few seconds for steam to enter the cleaning pad/ The steam mop will now glide easily over the surface to be cleaned
- When you have finished using the steam mop, press the steam flow button to stop steam flow, return to an upright position, making sure that it is supported and turn "OFF". Wait until the steam mop cools down)Approx 5 mins).

Accessories

The performance of your appliance depends on the accessory used. BLACK+DECKER accessories are engineered to high quality standards and designed to enhance the performance of your appliance. By using these accessories you will get the very best from your equipment.

Garment steam cleaning (Fig. H) (Available with BHSM15FX10)

- Attach the required accessory (15).
- Attach the required pad (15a).

Note! The garment head (15) should not be used without the pad (15a).

- Connect the hand held steam cleaner to the mains.
- Press the ON/OFF button (1). It takes approximately 30 seconds for the boiler to heat up.

Note! When first filled or after running dry, it can take up to 45 seconds for steam to be produced.

- Once boiler is up to temperature, Press the required steam setting button to start steam flow.
- When you have finished using the steam mop, press the steam flow button to stop steam flow, return to an upright position, making sure that it is supported and turn "OFF". Wait until the steam mop cools down (Approx 5 mins).

On pole storage (Fig. I) (Available with BHSM15FX10)

The appliance comes with an on pole storage unit (17).

- Clamp the on pole storage unit (17) onto the floor extension pole (7).

- The adaptor (9) can be stored in the opening in the top of the on pole storage unit, as shown in figure I.
- The bottom protrubence of the on pole storage unit (17) can be used to store individual attachments (11), (12), (13), (14) or (15).

Wall storage (Fig. J) (Available with BHSM15FX10)

The appliance comes with a wall storage unit (16).
Wall storage unit comes in 3 pieces:

- Wall bracket (16a) which is screwed into the wall.
- Storage hook (16b) which is clipped onto the wall bracket and allows you to hang the cable tidily.
- Storage box with lid (16c). This slides into place on the wall bracket via the rail system provided. Any accessories not being stored on the pole storage unit, can be stored in here.

Technical Data

		BHSM15FX
Voltage	V_{ac}	230
Power	W	1500
Tank Capacity	ml	500
Weight	kg	2.6

Troubleshooting

If your appliance seems not to operate properly, follow the instructions below. If this does not solve the problem, please contact your local BLACK+DECKER repair agent.

Problem	Step	Possible solution
The steam mop is not turning on	1.	Check the unit is plugged in at the wall socket
	2.	Check the unit is switched on using the ON/OFF switch (1)
	3.	Check the fuse in the plug
The steam mop is not producing steam	4.	The steam mop will only produce steam once the unit is switched on, the boiler has heated up for 30 seconds and then the steam flow button has been pressed on
	5.	Check that the water tank is full. Note: When first filled or after running dry it can take up to 45 seconds for steam to be produced
	6.	Check steps 1, then 2, then 3, then 4
The steam mop stops producing steam during use	7.	Check steps 4, then 5, then 3
The steam mop is producing too much steam during use	8.	The unit has two steam flow settings. Set the steam flow to low steam by pressing the button
The steam mop is producing too little steam during use	9.	The unit has two steam flow settings. Set the steam flow to high steam by pressing the button
Where can I get further information/ accessories	10.	www.blackanddecker.co.uk/steammop www.blackanddecker.ie/steammop

Australia & New Zealand
Stanley Black & Decker
www.blackanddecker.com.au
www.blackanddecker.co.nz
Tel.1800 338 002 (Aust) or Tel. 0800 339 258 (NZ)
810 Whitehorse Road Box Hill VIC 3128, Australia