BLACK&DECKER®

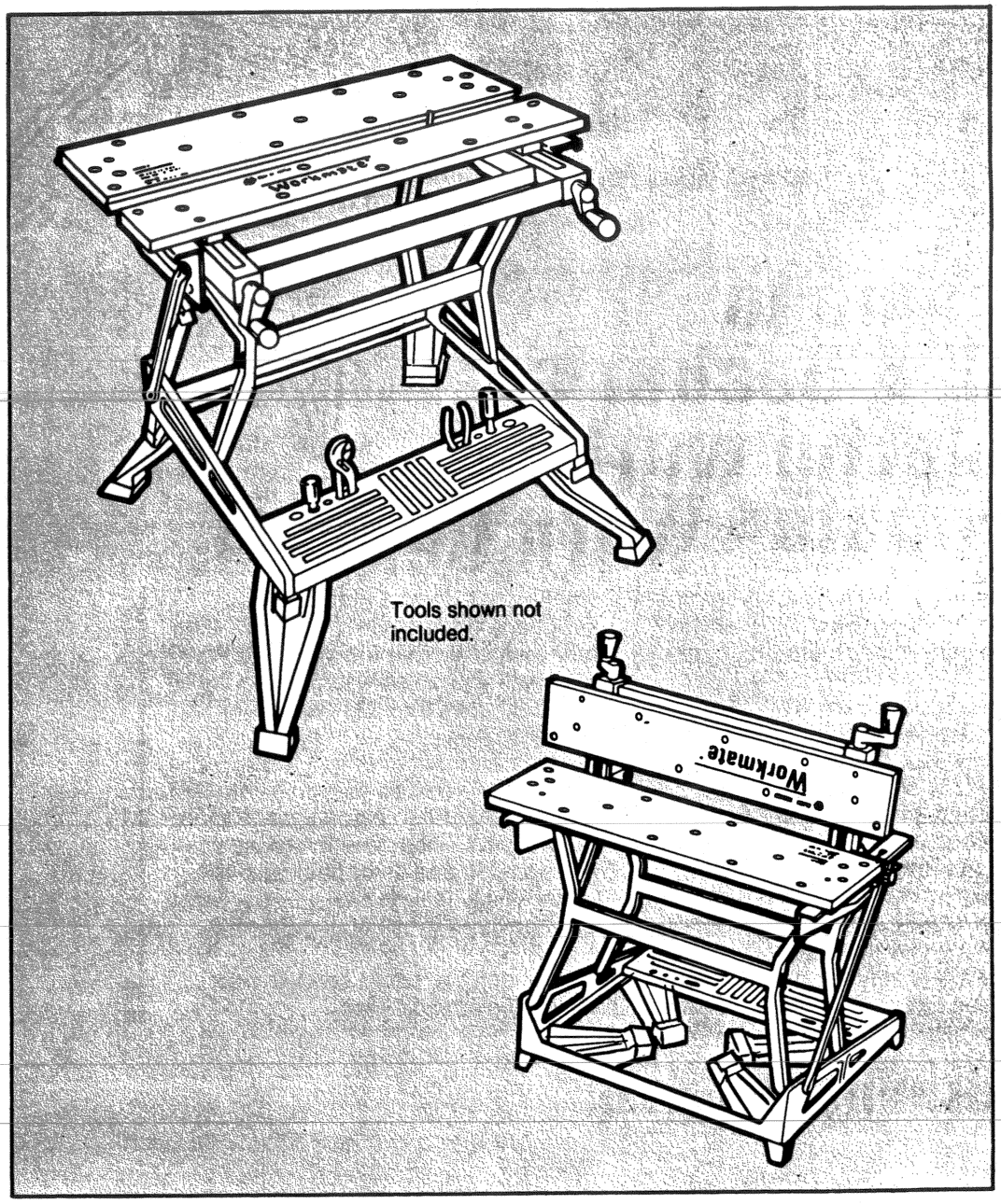

Tools shown not included.

Instruction Manual

Workmate® Work Center
79-041

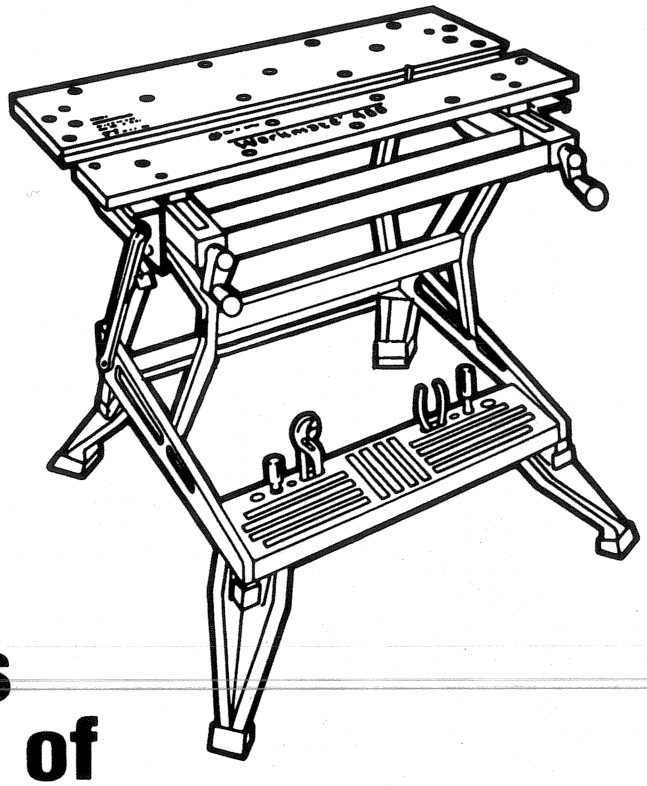

Welcome to Black & Decker's wonderful world of Workmate® Work Centers.

If you already own a Black & Decker Product, you know the pleasures a high quality, high performance product can deliver.

Your new Workmate® Work Center is a quality piece of equipment that has been carefully designed and manufactured to provide years of dependable service.

This instruction manual will familiarize you with the Work Center. It lists important facts and features which describe the Work Center's construction and basic working techniques.

So take a few minutes and thoroughly read this instruction manual. Complete set-up and application instructions are included. Only by being totally aware of what the Work Center can do will you be able to put it to the numerous tasks that it is capable of performing.

Pay particular attention to the Safety Rules we've provided for your protection.

We want you to enjoy your Workmate® Work Center, and the more you know about it, and its capabilities, the happier you'll be with it.

Thank you for selecting Black & Decker.

And don't forget to send in your owner's registration card.

BLACK&DECKER®

SAFETY INSTRUCTIONS

READ ALL INSTRUCTIONS

1. Do not load with more than 550 pounds.
2. Do not apply an unbalanced load which could cause the Work Center to tip over.
3. Do not use the Work Center as a step-ladder or standing platform. Do not use the lower platform as a step. The footboard is a foot **REST** only.
4. Do not store Work Center outdoors or in a damp location.
5. Avoid applying excessive force when clamping with the swivel pegs.
6. Be sure that the legs are fully open (for workbench height) and be sure that the table locks in position.
7. When using a power tool with the Work Center, follow the safety instructions in the tool's Instruction Manual.
8. Always wear safety glasses when operating power tools.
9. See "Using Power Equipment" in this manual for correct method of securing power tools in the Work Center. Never mount power tools directly in vise jaws; pressure may damage tools.
10. An even pressure of the vise jaws on the work piece is essential. Tighten both vise jaws uniformly.
11. When assembling your Work Center, use only the Special Plastic Socket Wrench provided. Use of other wrenches or sockets can damage your Work Center.
12. The tilting brackets must be locked while clamping in both horizontal and vertical positions.

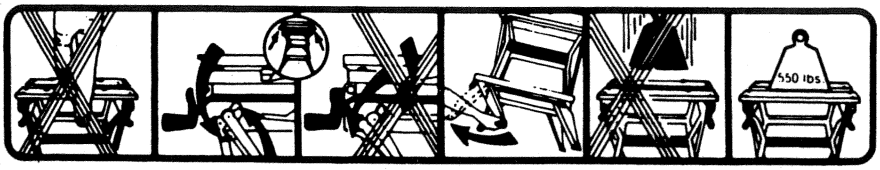

SAVE THESE INSTRUCTIONS FOR FUTURE USE.

Assembly

The 79-041 Work Center comes partially assembled. A standard screwdriver is required for assembly. A plastic socket wrench is included.

1. Empty the contents of the box and identify all components. (see Figure 1)

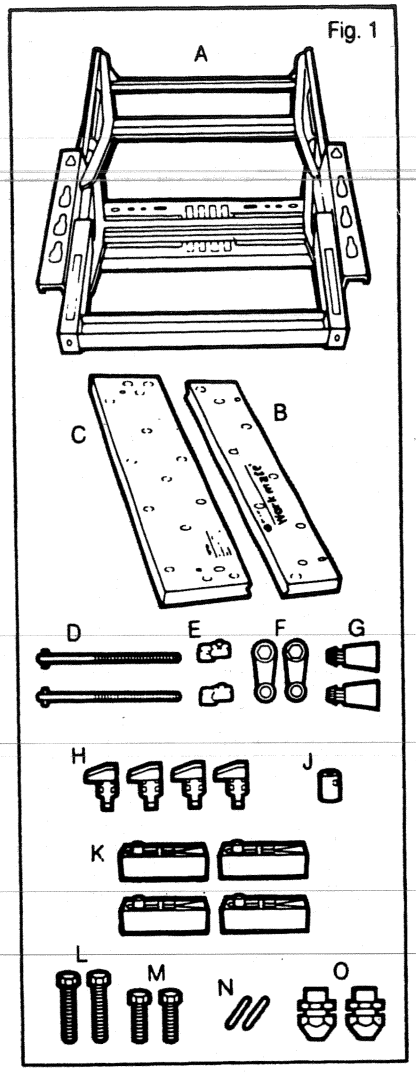

A. Frame
B. Front Jaw
C. Rear Jaw
D. Vise Screw
E. Vise Guide
F. Vise Crank
G. Crank Handle
H. Swivel Pegs
J. Socket Wrench
K. Four Top Blocks
L. Long Screws
M. Short Screws
N. Pins
O. Indexing Nuts

NOTE: A helpful diagram showing the assembled Workmate appears on pages 6 and 7 of this manual.

2. Place the Frame (A) on the floor in the position shown in Figure 1. Find the release levers near the plastic knobs on the sides of the Frame. Lift both release levers as shown in Figure 2 and pull up until you hear the Frame lock in Place.

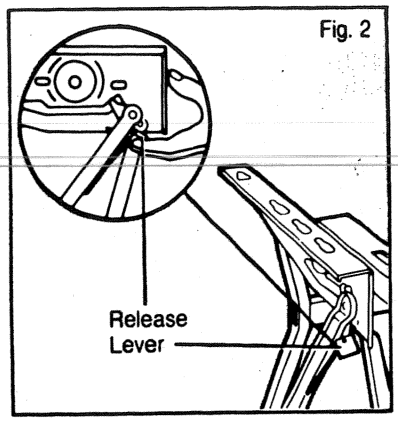

3. Open the folding legs on the bottom of the frame by pulling them down. Make sure that you feel them lock into place.

   NOTE: These legs can be folded if you want to use your Workmate as a sawhorse; extended, the Workmate is at workbench height.

4. Select the Vise Screws (D) and the Vise Guides (E). Screw one Vise Guide onto each Vise Screw about halfway, as shown in Figure 3.
5. Insert the unthreaded end of the Vise Screws into the Frame such that the Vise Guides are located in the slots on the top of the Frame and the unthreaded ends protrude through the holes in the front of the Frame, as shown in Figures 3 and 4.

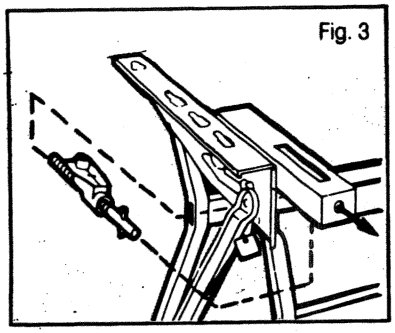

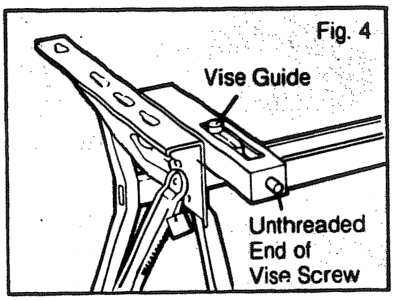

6. Install the two Vise Cranks (F) and secure them by driving the pins (N) through the holes in the cranks and the Vise Screws. (Align the holes in the Vise Cranks with the holes in the Vise Screws and strike the pins sharply with a steel hammer until they are flush with the sides of the Vise Cranks.) See Figure 5. Push on crank handles as shown.

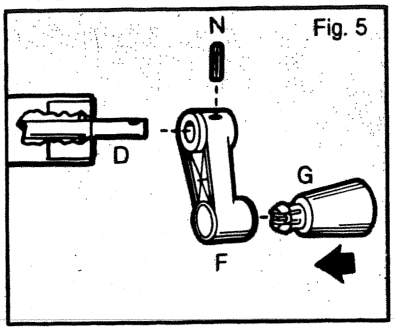

7. Select the Front Jaw (B) and two of the four Top Blocks (K). Place the two blocks on the top of both sides of the Frame with the hex shaped recesses in the bottoms positioned over the holes in the Vise Guides and the raised posts toward the front of the Workmate, as shown in Figure 6. (The front is the side with the Vise Cranks.)

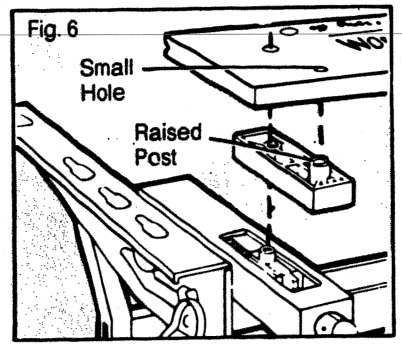

NOTE: For clarity, only the left side assembly is shown. Perform all operations on right side as well.

8. Place the Front Jaw on top of the two top blocks in such a way that the small holes (only one shown in Figure 7) fit over the raised posts on the Top Blocks. The other holes shown in the figure must align with the rear holes in the blocks and the holes in the Vise Guides. Study Figure 7 carefully until you fully understand it.

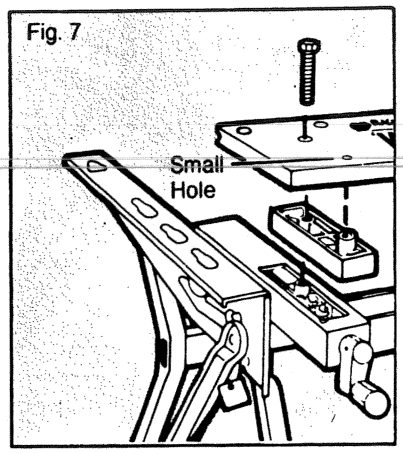

Fig. 7

9. Select the two shortest screws (M) and insert them through the Front Jaw, the Top Block and into the hole in the Vise Guide, as shown in Figure 7. Use the Plastic Socket Wrench with a screwdriver through it to securely tighten these screws, as shown in Figure 8.

   NOTE: If the crank handle becomes difficult to turn, slightly loosen these screws.

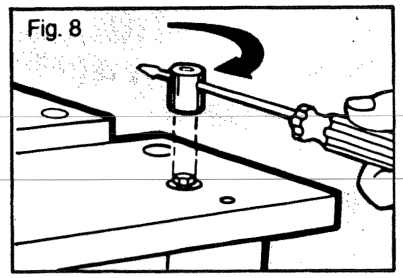
Fig. 8

10. Select the two Indexing Nuts (O) and insert them in the center keyhole in each side of the top of the frame, as shown in Figure 9. Slide them back into the narrow sections of the keyholes.

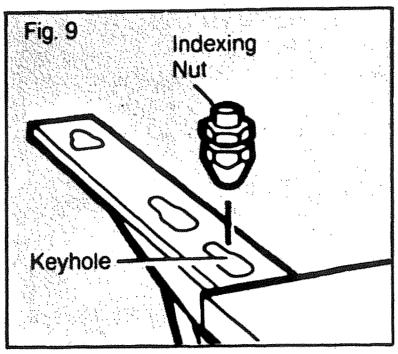

Fig. 9

11. Now select the Rear Jaw (C) and the two remaining Top Blocks (K). Position the blocks on both sides of the top of the Frame so that the hex shaped recesses fit over the hex shaped portions of the Indexing Nuts and the raised posts are toward the rear of the Workmate, as shown in Figure 10.

12. Place the Rear Jaw across the two Top Blocks in such a way that the small holes (only one shown in Figure 10) fit over the raised posts on the Top Blocks. The other holes in the figure must align with the front holes in the blocks and the Indexing Nuts beneath them.

13. Insert the remaining two screws (L) in the holes indicated in Figure 10. Insert them down through the Rear Jaw, through the Top Block and into the Indexing Nuts in the Frame. Tighten securely using the Plastic Socket Wrench, as shown in Figure 8.

14. The assembly of your Workmate is now complete. You should lubricate the Vise Screw threads with a few drops of light weight household oil at first and, then periodically if they become difficult to turn.

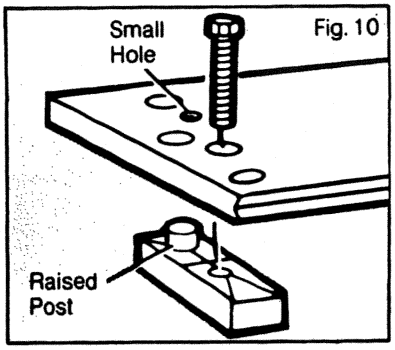

Fig. 10

15. The holes in the footboard provide convenient storage for hand tools as shown in Figure 11. (Tools not included.)

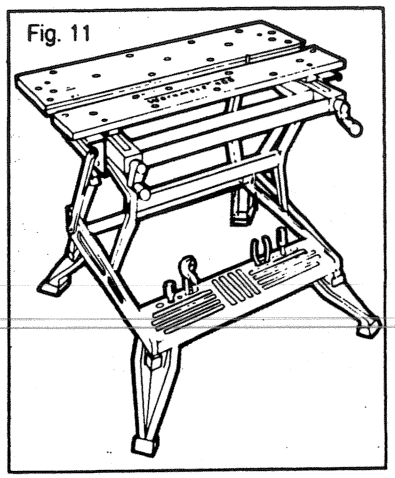
Fig. 11

Setting Up Workmate® Work Center

The Work Center sets up easily into two working heights: the lower "sawhorse" height and the upper "workbench" height. Choose the position best suited to your particular job. In each case, the Work Center provides a convenient and rigid work surface.

This is the lower "sawhorse" height, measuring 24" high. Be sure the Work Center locks into position.

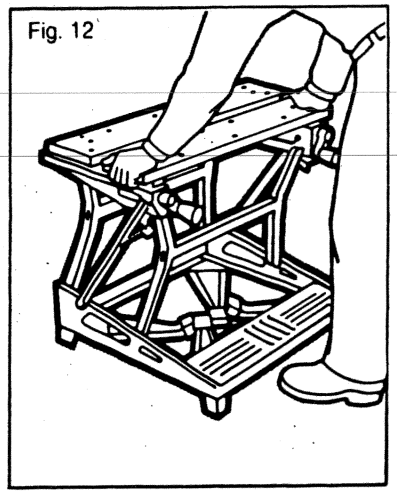
Fig. 12

Setting Up Workmate® Work Center (cont.)

To raise the Work Center to its full workbench height of 30-5/8" extend the 4 base legs.

Fig. 13

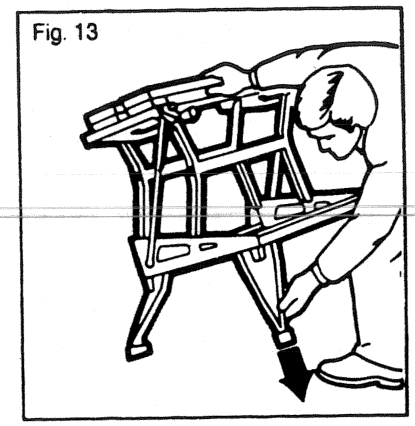

Always make sure that each leg is swung into its extended position. This will ensure safe use of the Work Center at this upper working height.

How To Store Your Workmate® Work Center

1. Fold in all four base legs.
2. Place one foot on footboard.
3. Using index fingers, simultaneously press release latches, then pull top toward you.

Fig. 14

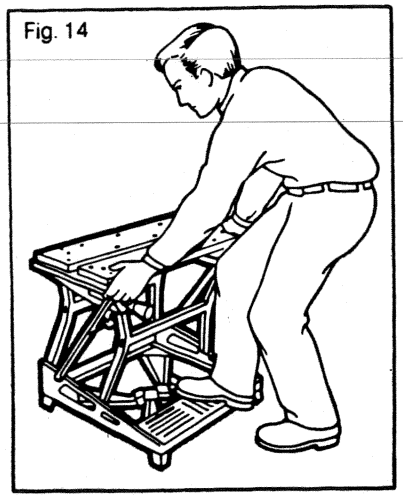

4. Close unit and clamp in locked position.
5. You can now store Workmate® conveniently in minimum space.

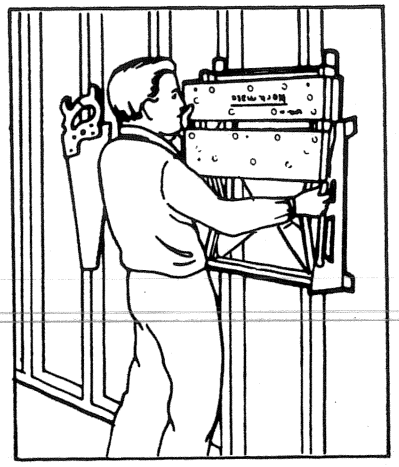

Holding Irregular Shapes With Workmate® Work Center

Using the swivel pegs in the appropriate holes and the independent action of both vise handles, the Work Center can secure the most irregular shapes. Lets you grip objects that used to be impossible to hold.

Rotate swivel legs to accept irregular shapes. Outside swivel pegs extend vise capacity for a 30" diagonal grip.

Fig. 16

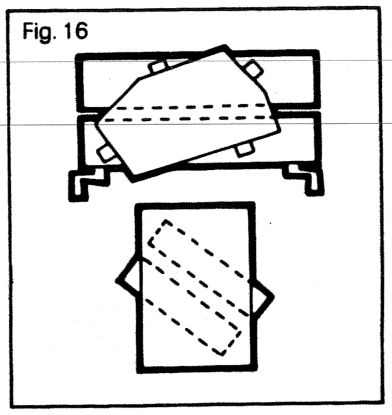

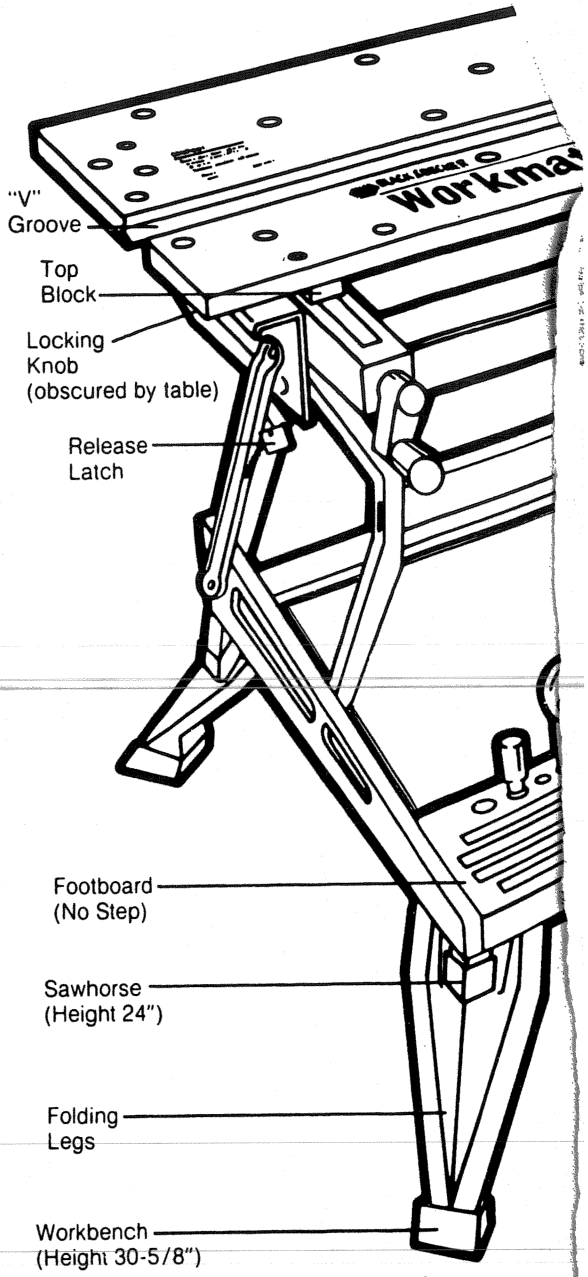

Working With Your Workmate® Work Center

The Work Center is a vise, sawhorse and workbench all in one. Its basic design and special features help you perform a complete range of workshop tasks from the simplest to the most complicated.

Fig. 17

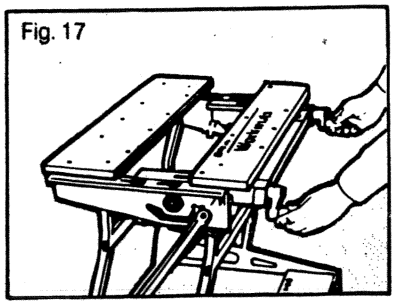

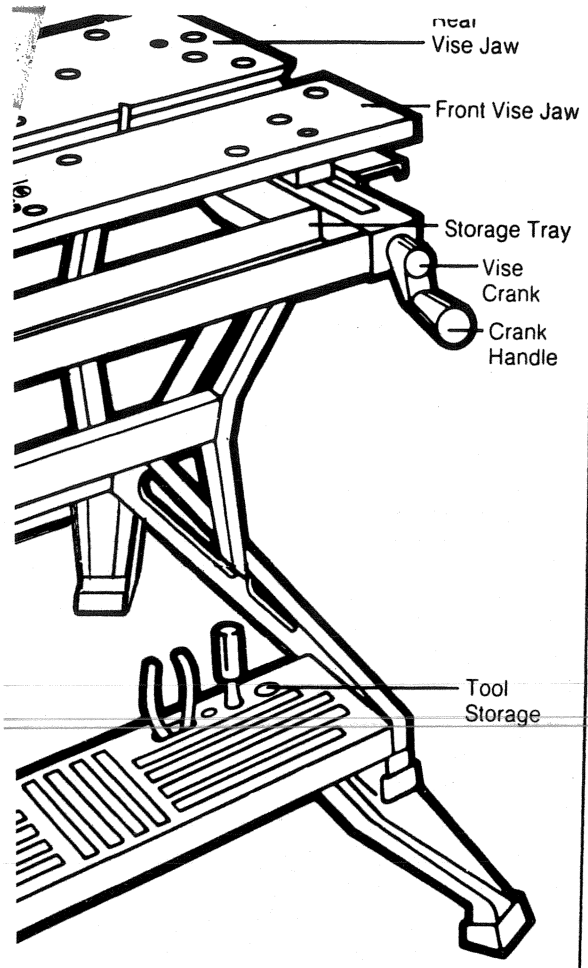

Working With Your Workmate® Work Center (cont.)

With the rear vise jaw in the front set of holes (those closest to the front vise jaw) the vise opens from zero (jaw touching) to 2-5/8" maximum.

With the rear jaw in the middle set of holes, the opening ranges from 2-3/8" minimum to 5-5/8" maximum.

With the rear vise jaw in the rear set of holes, the vise opening ranges from 5-1/2" minimum to 8-3/8" maximum.

NOTE: The preceding limits of vise jaw openings are valid only when the jaws are parallel. The numbers do not reflect the opening limitations of tapered jaws; see below.

Three Position Rear Vise Jaw

The Rear Vise Jaw can be mounted in any of three sets of keyhole shaped holes in the top of the Workmate Frame. This procedure does not require any tools. The Workmate Rear Jaw is designed to be a slide lock system. Slide the jaw forward until the indexing nuts are in a position to lift up and out of the frame. Select the desired set of holes and insert the indexing nuts into the large part of the desired keyhole and then slide the jaw back so the nuts slide into the narrow part of the hole.

CAUTION: The jaw can be mounted in any of the three SETS of keyholes. That is: Both forward holes, Both center holes or Both rear holes. It can not be mounted in any other way to create an angle. Angles are the job of the moveable Front Vise Jaw.

CAUTION: Do not attempt to use your Workmate unless the rear jaw is securely locked in position as described in this manual.

Tapering Vise Jaws

The heart of the Work Center is in the action of the two parallel vise jaws. The two vise handles adjust the jaws to a variety of clamping capabilities. Because each handle works independently, the opening can be tapered as shown in Figure 19.

Fig. 18

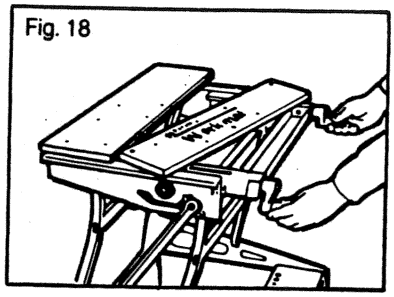

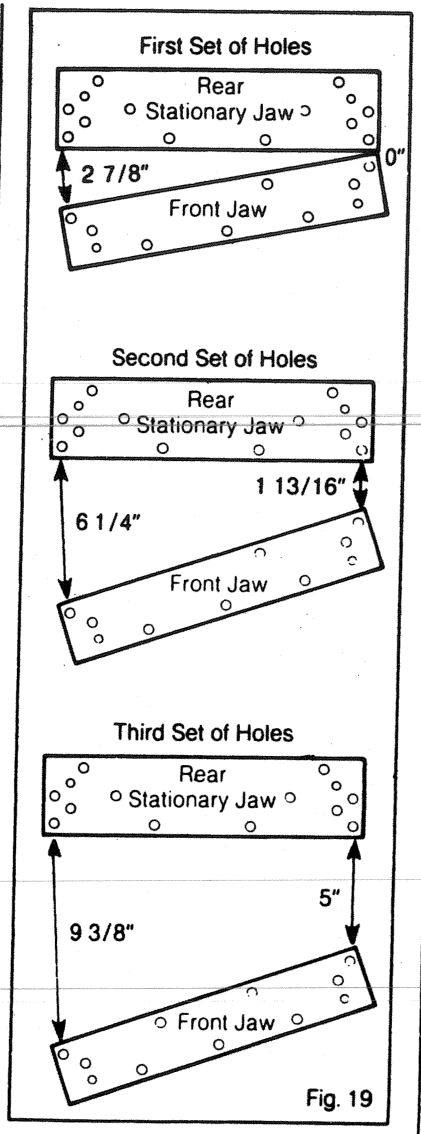

Fig. 19

Use of the swivel pegs in the appropriate vise holes extends the vise capacity of the Work Center up to 19" wide, or up to 30" when objects are held diagonally.

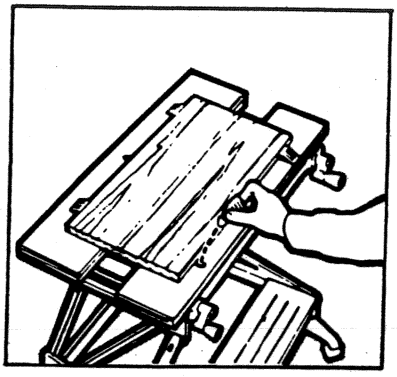

Vertical Clamping

Turning both locking knobs 1/6 turn will unlock the tilting bracket. Another 1/6 turn will lock it.

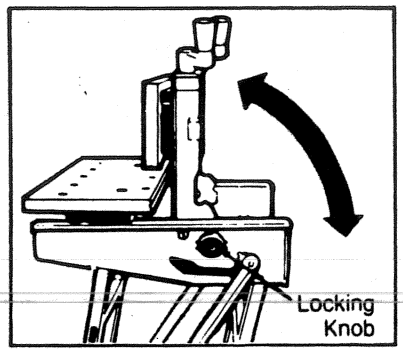

NOTE: Be sure to lock in the horizontal position while storing the Workmate® Work Center.

The handles adjust the jaws to a maximum 2-1/4" vertical clamping distance. Before the tilting bracket is raised to the vertical position, the rear jaw must be in the middle keyhole.

BE CAREFUL: Do not trap fingers when lowering to the horizontal position.

Workmate® makes any do-it-yourself task easier.

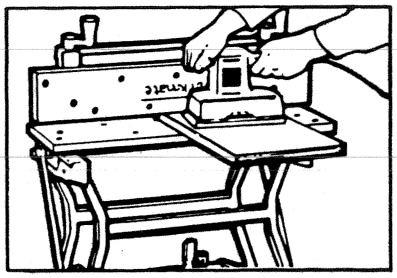

Clampdown jaw holds thin materials securely.

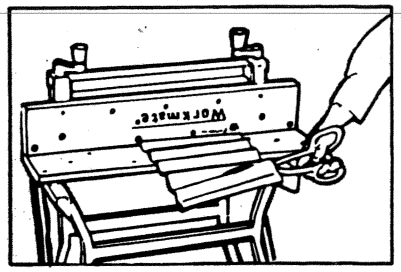

Sawing

In its lower position, the Work Center is a sawhorse.

Holds material securely.

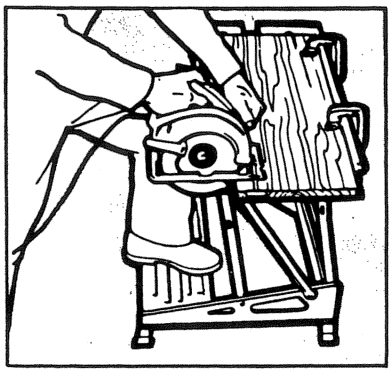

Sawing tubular pieces is easy when they are held horizontally in the specially designed "V" grooves running along the face of the vise jaws.

CAUTION: Swivel pegs are to be used only in cases where the workpiece **DOES NOT** extend beyond the surface of the two vise jaws. Black & Decker supplies, at extra cost, clamps for securing larger projects to the Workmate and "C" clamps are available at your local hardware store.

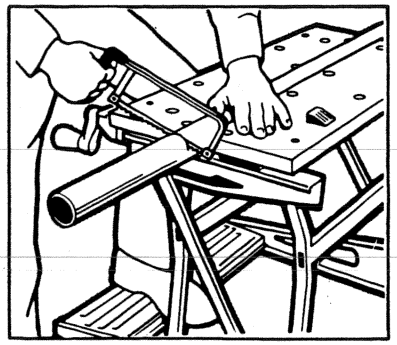

Vertical "V" grooves in the face of the vise jaws permit rigid vertical grasping of tubular objects.

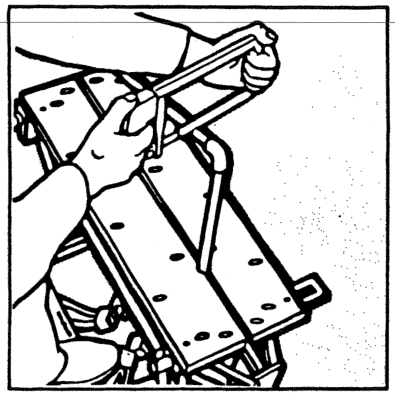

NOTE: Place your foot as shown on the footboard of the Work Center to steady it. DO NOT USE AS A STEP.

Planing, Sanding, Routing

Your Workmate® Work Center permits you to do a better job when planing, sanding, and routing because work is held securely.

Holds material at perfect height and position. Strength and stability to handle large and awkward sizes and shapes.

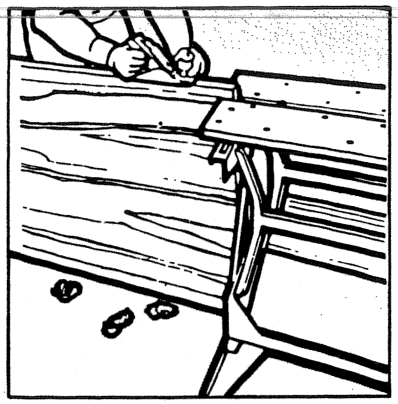

Power sand the most irregular shapes.

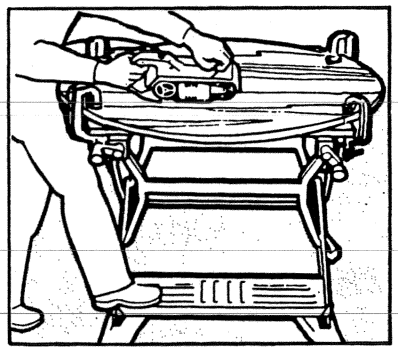

Special tasks won't mean special problems any more. Routing can be easy and the results more professional.

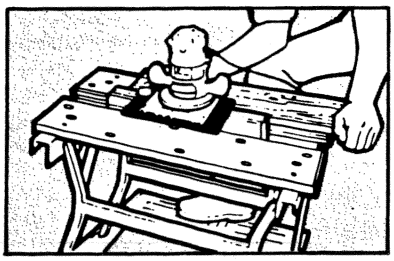

Using Power Equipment With Workmate® Work Center

Construct individual mounting boards for your power tools to save workbench space.

CAUTION: Securely mount tool accessories to mounting board with screws or bolts. Always wear safety glasses when using power tools with the Work Center.

Power Tool Mounting Board

Attachments such as Black & Decker Vertical Drill Stand and the Horizontal Drill Stand may be attached with screws to a suitable sized piece of plywood to the underside of which a block of wood is attached. The block, when gripped securely in the Work Center vise jaws, provides rigidity for the operation of the tools in the attachments.

Suggested Sizes

A. Mounting Board 12" x 12" x 3/8"
B. Vise Block 2" x 4" x 6"
C. Retaining Board 3" x 3" x 1/4"
D. Bolt 5"

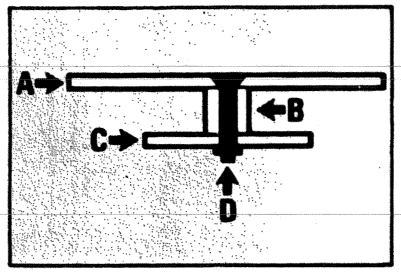

The block of wood on the underside of the mounting board is held in the jaws of the Work Center. The power tool is secure for use.

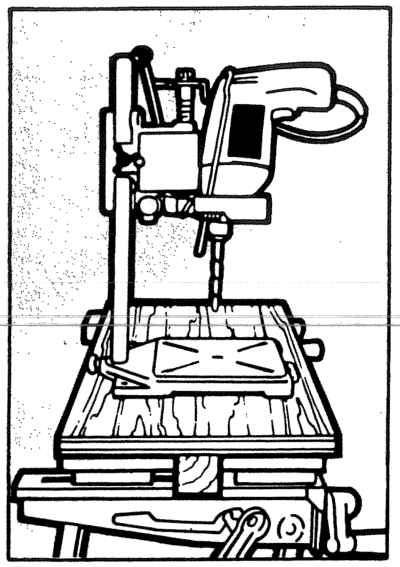

Add power tools you thought you never had room for. Securely holds even the larger tools.

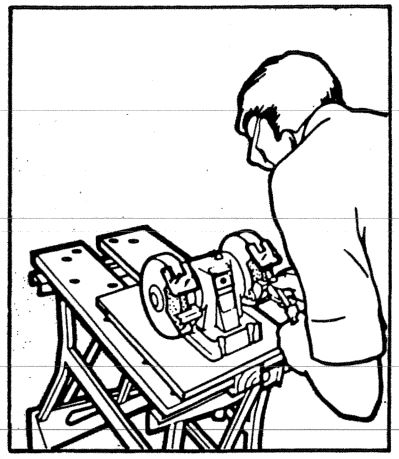

You'll want to use all of your power tool accessories more often. For instance, buffing—it's easier and more convenient with the Workmate® Work Center.

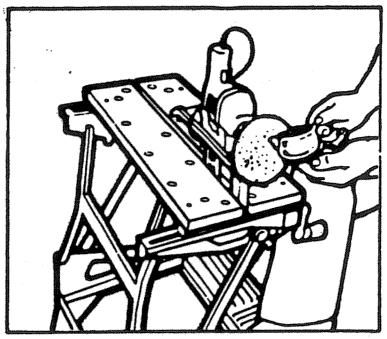

General Purpose Table

Suggested Sizes

2' x 6' x 1/4" plywood
2" x 4" stud, 30" long
4 bolts 5" long

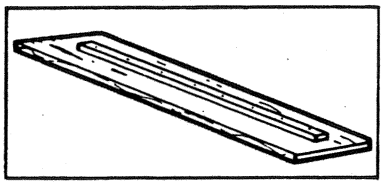

CAUTION: Do not use nails or screws. Use bolts. Center table top over center of vise jaws.

When the project calls for extra work space, you can make a work table by attaching a block of wood to the underside of a piece of plywood. This makes an extra long table surface for a work or play occasion. Center table over center of vise jaws and securely clamp block on bottom of table.

Important

To assure product **SAFETY** and **RELIABILITY**, repairs, maintenance and adjustment should be performed by Black & Decker Service Centers or other qualified service organizations, always using Black & Decker replacement parts.

Accessories

The accessories listed in this manual are available at extra cost from your local dealer or Black & Decker Service Center. A complete listing of service centers is included on the owner's registration card packed with your tool.

If you need assistance in locating any accessory, please contact:

Black & Decker (U.S.) Inc.
User Services Department
10 North Park Drive
P.O. Box 857
Hunt Valley, MD 21030-0857

Recommended accessories for your tool are listed in this manual. **CAUTION:** the use of any other accessories or attachments may be hazardous.

Workmate Accessories

(Available at Extra Cost)

Cat. No. 79-010 Swivel Pegs

Packaged in pairs. Ideal for holding large and irregular shaped objects.

CAUTION: Swivel pegs are to be used only in cases where the workpiece **DOES NOT** extend beyond the surface of the two vise jaws. Black & Decker supplies, at extra cost, clamps for securing larger projects to the Workmate and "C" clamps are available at your local hardware store.

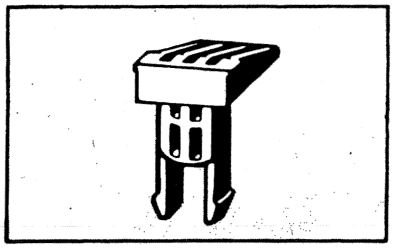

Cat. No. 79-013 Type 2 Workmate® Router & Shape Guide

Professional router cuts made easy. Holds Black & Decker and other popular routers securely on Workmate®. Portable Work Center table top. Gives solid "hands off" support for all types of router cuts.

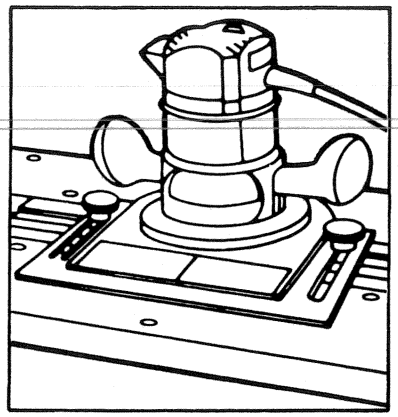

Cat. No. 79-018 Workmate® Horizontal Clamp

Fits into swivel peg holes in vise jaws to aid in clamping horizontally. Excellent as small gluing clamp.

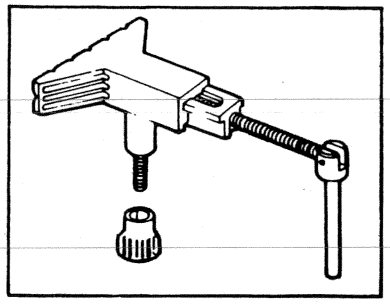

Cat. No. 79-015 Workmate® Drill Guide

Holds Black & Decker and most other drills securely for vertical or 0° to 90° angular drilling. Use freehand for accurate angles or horizontally in Workmate® to hold drill for buffing, sanding jobs.

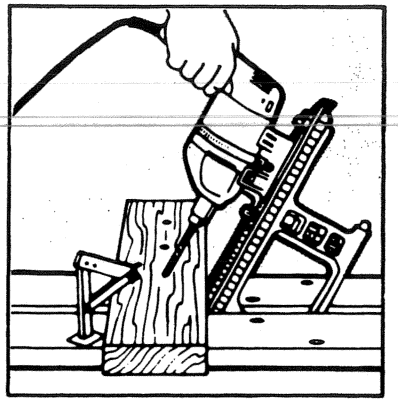

Cat. No. 79-016 Workmate® Clamps (Pkg. of two)

Specially designed clamp assembly to hold items on a Work Center vise jaw for gluing, routing, sanding, sawing, etc.

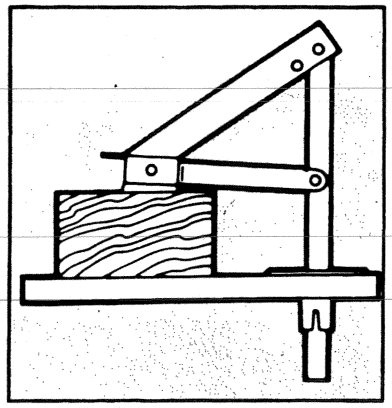

NOTES

Black & Decker's Full Two Year Home Use Warranty states that, in case of a defect, you may return the tool to the place of purchase for a free replacement (if it is a participating retailer) or you may take it to a Black & Decker Service Center.

Home Use Warranty (A Full Two Year Warranty)

Black & Decker (U.S.) Inc. warrants this product for two years against any defects that are due to faulty material or workmanship. Please return the complete unit, transportation prepaid, to the seller (if a participating retailer) for free replacement (proof of purchase may be required). The unit may also be returned to a Black & Decker Service Center listed under "Tools Electric" in the Yellow Pages for free replacement or repair at our option. This warranty does not apply to accessories. This warranty gives you specific legal rights and you may have other rights which vary from state to state. Should you have any questions, contact your nearest Black & Decker Service Center Manager.

Black & Decker Workmate® Work Center covered by one or more of the following U.S. patents: 3,615,087; 3,841,619; 4,034,684; 4,076,229; 4,127,260; 4,140,309; 4,154,435; 4,155,386; 4,157,174; 4,159,821; 4,169,606; 230,801; D250,079; 4,253,212; 243,820; 4,248,411; 4,265,436; Pat. Ped. Corresponding Patents in other countries.

See 'Tools-Electric'
—Yellow Pages—
for Service & Sales

BLACK&DECKER®

Form No. 741951

BLACK & DECKER (U.S.) INC., U.S. Power Tools Group, 10 North Park Drive, P.O. 798, Hunt Valley, MD 21030-0798 U.S.A.

79-041